ZA312 0% MERCURY

PR41
Hearing Aid Battery

Art.No. 100803

Technical Data Sheet

Specifications

Chemical system	Zinc / Air
Nominal Voltage	1,45 V
Typical Capacity	**165 mAh**
Self Discharge	Less than 5% per year at 20°C with label applied
Weight	~0,5g
Operating condition	-10 - 50°C / 25-70% r.h.

These batteries need air when they are used Battery compartment must allow free access of air
Allow reasonable time between activation (after removable of tab) and commencement of electrical measurement

Dimensions

(according IEC 60086-2) (Ed.12 Feb. 2011)

Diameter	7.9 mm (0,311“)
Height	3.6 mm (0,142“)

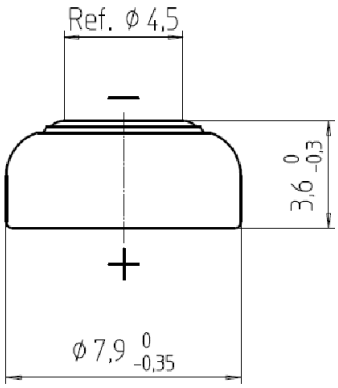

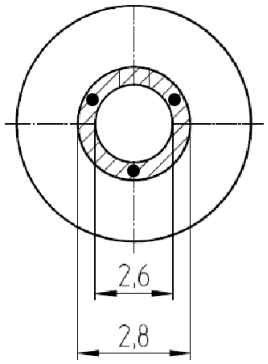

Air-intake holes placement

Discharge Curve

According IEC60086-2 (Ed.12 Feb. 2011)

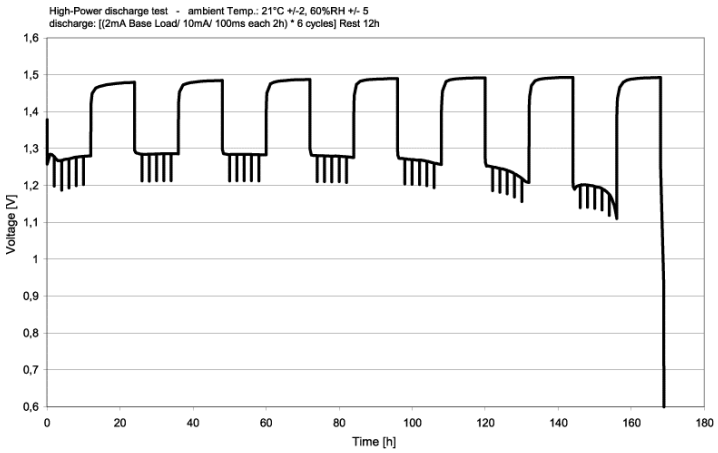

Information and contents in this data sheet are for reference purpose only. They do not constitute any warranty or representation and are subject to change without notice. For most current information and further details, please contact your Renata representative. For safety related information please consult the PSDS document related to that product or product family. The Products of Renata SA are neither designed nor authorized for use in certain areas of application of environment. For further details we refer to our webpage www.renata.com/downloads/restriction_of_use

A COMPANY OF THE SWATCH GROUP

Renata SA
CH-4452 Itingen/Switzerland
Tel. +41 (0)61 975 75 75
Fax. +41 (0)61 975 75 95
sales@renata.com
www.renata.com